# DM-F19A

INGENIEURBÜRO FÜR INDUSTRIE-ELEKTRONIK GMBH

## IPC Monitor

### *Specifications*

Preliminary

| Model | | DM-F65A | DM-F08A | DM-F12A | DM-F15A | DM-FW15A |
|---|---|---|---|---|---|---|
| LCD | LCD Display | 6.5” (4:3) | 8” (4:3) | 12" (4:3) | 15" (4:3) | 15.6” (16:9) |
| | Max. Resolution | 640 (W) x 480 (H) | 800 x 600 | 1024 (W) x 768 (H) | 1024 (W) x 768 (H) | 1336 (W) x768 (H) |
| | Brightness (cd/m²) | 800 | 500 | 600 | 450 | 400 |
| | Contrast Ratio | 600:1 | 500:1 | 700 : 1 | 800 : 1 | 500:1 |
| | LCD Color | 16.2M | 262K | 16.2M | 16.2M | 16.2M |
| | Pixel Pitch (mm) | 0.207 x 0.207 | 0.0675 x 0.2025 | 0.24 x 0.24 | 0.29 x 0.29 | 0.252 x 0.252 |
| | Viewing Angle (H-V) | 160° / 140° | 140°/120° | 160° /140° | 160° / 150° | 170° / 160° |
| | Backlight MTBF (Hrs) | 50000 | 50000 | 50000 | 70000 | 50000 |
| Touchscreen & Controller | | 5-wire resistive single touch window/ Penmount 6000 | | 5-wire resistive single touch window/ Penmount 6000<br>2-point projected capacitive touch window/ EETI EXC3000 | | |
| I/O Ports | | 1 x VGA (DB-15)<br>1 x DVI<br>1 x USB 2.0 (touch)<br>1 x RS-232 (reserved for resistive touch ATO)<br>1 x Lockable 12V DC jack | | 1 x VGA (DB-15)<br>1 x HDMI<br>1 x DisplayPort 1.1<br>1 x USB 2.0 (touch)<br>1 x RS-232 (reserved for resistive touch ATO)<br>1 x Lockable 9V-36V DC jack<br>1 x 9V-36V terminal block | | |
| OSD | OSD Button | 5-key membrane OSD keypad | | 7-key membrane OSD keypad | | |
| | Smart OSD Software | Smart OSD Software | | | | |
| Physical | Construction Material | Aluminum front frame and sheet metal rear cover | | | | |
| | Mounting | Panel Mount/ Rack Mount<br>75 x 75 VESA Mount | | Panel Mount/ Rack Mount/ 100 x 100 VESA Mount | | |
| | Enclosure Color | Black C | | | | |
| | Dimensions (mm) | 191.8 x 154.36 x 42.88 | 222.2 x 182.2 x 42.7 | 262.2 x 322.2 x 40.5 | 303 x 378.5 x 43.2 | 400.1 x 253.3 x 52.9 |
| | Cutout Dimensions (mm) | 180 x 140 | 206 x 154 | 244.8 x 304.8 | 285.6 x 361.1 | 379.1 x 232.3 |
| | Weight (kg) Net/ Gross | 1.1 / 2.6 | 1.33 / 4.5 | 2.7 / 4.9 | 3.5 / 5.5 | 4 / 6.5 |
| Environment | Operating Temperature (with air flow) | -20°C ~ 60°C (with air flow) | | | | |
| | Storage Temperature | -20°C ~ 70°C | | | | |
| | Humidity | 10% to 95% (non-condensing) | | | | |
| | IP Level | IP 65 compliant front panel | | | | |
| | Safety and EMC | CE & FCC certified | | | | |
| Power Input | | 12V DC | | 9V~36V DC | | |
| Power consumption | | 12V @ 0.5A | 12V @ 0.5A | 9V @ 2.2A<br>36V @ 0.5A | 9V @ 1.6A<br>36V @ 0.4A | 9V @ 1.3<br>36V @ 0.33 |

# DM-F19A

INGENIEURBÜRO FÜR INDUSTRIE-ELEKTRONIK GMBH

## IPC Monitor

### *Specifications*

Preliminary

| Model | | DM-F17A | DM-FW19A | DM-F19A | DM-F22A | DM-F24A |
|---|---|---|---|---|---|---|
| LCD | LCD Display | 17" (5:4) | 18.5" (16:9) | 19" (5:4) | 21.5" (16:9) | 23.8" (16:9) |
| | Max. Resolution | 1280 (W) x 1024 (H) | 1336 (W) x 768 (H) | 1280 (W) x 1024 (H) | 1920 (W) x 1080 (H) | 1920 (W) x 1080 (H) |
| | Brightness (cd/m²) | 350 | 400 | 350 | 250 | 250 |
| | Contrast Ratio | 1000 : 1 | 1000 : 1 | 1000 : 1 | 1000 : 1 | 3000 : 1 |
| | LCD Color | 16.7M | | | | |
| | Pixel Pitch (mm) | 0.26 x 0.26 | 0.3 x 0.3 | 0.294 x 0.294 | 0.25 x 0.25 | 0.28 x 0.28 |
| | Viewing Angle (H-V) | 170° / 160° | | | 170° / 160° | 178° / 178° |
| | Backlight MTBF (Hrs) | 50000 | | | 30000 | 30000 |
| Touchscreen & Controller | | 5-wire resistive single touch window/ Penmount 6000<br>2-point projected capacitive touch window/ EETI EXC3000 | | | 2-point projected capacitive touch window/ EETI EXC7200 | 2-point projected capacitive<br>2-point touch window/ EETI EXC7200 |
| I/O Ports | | 1 x VGA (DB-15)<br>1 x DVI (F19A only)<br>1 x HDMI (F17A & FW19A only)<br>1 x DisplayPort 1.1<br>1 x USB 2.0 (touch)<br>1 x RS-232 (reserved for resistive touch ATO)<br>1 x Lockable 9V-36V DC jack<br>1 x 9V-36V terminal block | | | 1 x VGA (DB-15)<br>1 x HDMI<br>1 x DisplayPort 1.1<br>1 x USB 2.0 (touch)<br>1 x RS-232 (reserved for resistive touch ATO)<br>1 x Lockable 9V-36V DC jack<br>1 x 9V-36V terminal block | |
| OSD | OSD Button | 7-key membrane OSD keypad | | | | |
| | Smart OSD Software | Smart OSD Software | | | | |
| Physical | Construction Material | Aluminum front frame and sheet metal rear cover | | | | |
| | Mounting | Panel Mount/ Rack Mount/ 100 x 100 VESA Mount | | | Panel Mount / 100 x 100 VESA Mount | Panel Mount / 100 x 100 VESA Mount |
| | Enclosure Color | Black C | | | | |
| | Dimensions (mm) | 341.4 x 408.4 x 49.3 | 468.8 x 288.2 x 48.9 | 372.4 x 447.4 x 49.57 | 358.4 x 550.4 x 49.1 | 382 x 600 x 49.4 |
| | Cutout Dimensions (mm) | 324 x 391 | 447.8 x 267.2 | 430 x 355 | 340 x 532 | 358.6 x 576.6 |
| | Weight (kg) Net/ Gross | 4.4 / 7.1 | 5 / 8.1 | 5.4 /8.4 | 6.3 / 9.6 | 7.6 / 10.9 |
| Environment | Operating Temperature (with air flow) | -20°C ~ 60°C | -20°C ~ 60°C (with air flow) | -20°C ~ 60°C | -10°C ~ 50°C | -10°C ~ 50°C |
| | Storage Temperature | -20°C ~ 70°C | -20°C ~ 70°C | -20°C ~ 70°C | -20°C ~ 60°C | -20°C ~ 60°C |
| | Humidity | 10% to 95% (non-condensing) | | | | |
| | IP Level | IP 65 compliant front panel | | | | |
| | Safety and EMC | CE & FCC certified | | | | |
| Power input | | 9V~36V DC | | | | |
| Power consumption | | 9V @ 2.6A<br>36V @ 0.6A | 9V @ 1.33A<br>36V @ 0.35A | 9V @ 3.3A<br>36V @ 0.8A | 9V @ 2.5A<br>36V @ 0.6A | 9V @ 3.4A<br>36V @ 0.8A |

# DM-F19A

INGENIEURBÜRO FÜR INDUSTRIE-ELEKTRONIK GMBH

## IPC Monitor

## Ordering Information

| | | Description |
|---|---|---|
| 6.5” | DM-F65A/R-R10 | 6.5” 800 cd/m² high-luminance VGA LCD monitor with aluminum die casting front panel, black color, USB resistive touchscreen, R10 |
| 8” | DM-F08A/R-R10 | 8” 500 cd/m² SVGA LCD monitor, Aluminum front panel, Black color, W/ USB resistive touch screen, 12V DC input, R10 |
| 12” | DM-F12A/R-R11 | 12” 600 cd/m² XGA LCD monitor, aluminum front panel, black color, W/ USB resistive touchscreen, 9 ~36V DC input, R11 |
| | DM-F12A/PC-R11 | 12” 600 cd/m² XGA LCD monitor, aluminum front panel, black color, W/ USB projected capacitive touchscreen, 9 ~36V DC input, R11 |
| 15” | DM-F15A/R-R20 | 15” 450 cd/m² XGA LCD monitor, Aaluminum front panel, black color, W/ USB resistive touchscreen, 9 ~36V DC input, R20 |
| | DM-F15A/PC-R20 | 15” 450 cd/m² XGA LCD monitor, aluminum front panel, black color, W/ USB projected capacitive touchscreen, 9 ~36V DC input, R20 |
| 17” | DM-F17A/R-R11 | 17” 350 cd/m² SXGA LCD monitor, aluminum front panel, black color, W/ USB resistive touchscreenn, 9 ~36V DC input, R11 |
| | DM-F17A/PC-R11 | 17” 350 cd/m² SXGA LCD monitor, aluminum front panel, black color, W/ USB projected capacitive touchscreen, 9 ~36V DC input, R11 |
| 19” | DM-F19A/R-R10 | 19” 350 cd/m² SXGA LCD monitor, aluminum die casting front panel, black color, W/ USB resistive touchscreen, 9 ~36V DC input, R10 |
| | DM-F19A/PC-R10 | 19” 350 cd/m² SXGA LCD monitor, aluminum die casting front panel, black color, W/ USB projected capacitive touchscreen, 9 ~36V DC input, R10 |
| 21.5” | DM-F22A/PC-R11 | 21.5” 250 cd/m² FHD LCD monitor, aluminum front panel, black color, W/ USB projected capacitive touchscreen, 9 ~36V DC input, R11 |
| 24” | DM-F24A/PC-R20 | 23.8” 250 cd/m² FHD LCD monitor, Aluminum front panel, Black color, W/ USB projected capacitive touch screen, 9 ~36V DC input, R20 |

## Options

| Item | DM-F65A | DM-F08A | DM-F12A | DM-F15A | DM-F17A | DM-F19A | DM-F22A | DM-F24A |
|---|---|---|---|---|---|---|---|---|
| Arm | ARM-11-RS | | ARM-11-RS | ARM-31-RS | ARM-31-RS | ARM-31-RS | ARM-31-RS | ARM-31-RS |
| Stand | STAND-B08 | | STAND-A12-RS<br>STAND-C12-R10 | STAND-A19-RS<br>STAND-C19-R10<br>STAND-A21-R10 | STAND-A19-RS<br>STAND-C19-R10<br>STAND-A21-R10 | STAND-A19-RS<br>STAND-C19-R10<br>STAND-A21-R10 | STAND-A19-RS<br>STAND-C19-R10<br>STAND-A21-R10 | STAND-A19-RS<br>STAND-C19-R10<br>STAND-A21-R10 |
| Wall Mount Kit | AFLWK-12 | | WK-190MS-R10 | | | | | |
| Panel Mount Kit | FPK-07-R10 | | FPK-01-R10 | FPK-01-R10 | FPK-01-R10 | FPK-02-R10 | FPK-02-R10 | FPK-03-R10 |
| Rack Mount Kit | FRK65-R10 | FRK08-R10 | FRK12-R10 | FRK15-R10 | FRK17-R10 | FRK19D-R10 | N/A | N/A |
| Cable Cover | N/A | N/A | N/A | DM-F-CC01-R10 | DM-F-CC01-R10 | DM-F-CC02-R10 | DM-F-CC02-R10 | DM-F-CC02-R10 |
| RS-232 Touch Cable Kit | DM-F-COMKIT-R10 | | | | | | N/A | N/A |
| HDMI Cable | N/A | | 32012-000800-101-RS | 32012-000800-101-RS | 32012-000800-101-RS | N/A | 32012-000800-101-RS | 32012-000800-101-RS |
| DisplayPort Cable | N/A | | 32004-000200-100-RS | | | | | |
| DVI Cable | 32000-086600-RS | | N/A | N/A | N/A | 32000-086600-RS | N/A | N/A |
| Power Adapter | N/A | | 63040-010060-120-RS | | | | | |

## Packing List

| Item | P/N | Q'ty | Description |
|---|---|---|---|
| Utility CD | | 1 | Drivers and user manual |
| Touch Pen | 43125-0002C0-00-RS<br>(DM-F65A/F08A/F12A/F15A/F17A/F19A only) | 1 | Resistive touch only |
| USB Cable | 32001-006100-100-RS | 1 | For touchscreen |
| VGA Cable | 32000-036200-RS | 1 | |
| Power Adapter | 63040-010036-121-RS<br>(for DM-F65/08A) | | |

# DM-F19A

INGENIEURBÜRO FÜR INDUSTRIE-ELEKTRONIK GMBH

## IPC Monitor

*DM-F65A/08A*
*Fully Integrated I/O*

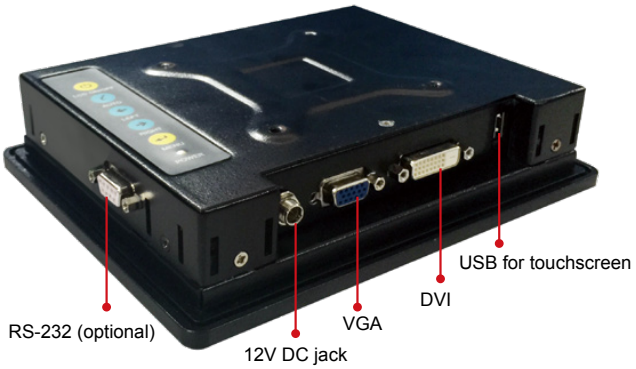


*DM-F12A/F15A/FW15A/F17A*
*Fully Integrated I/O*

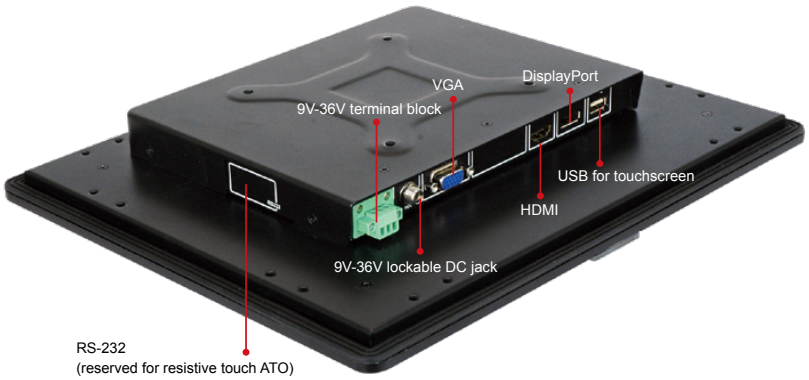


*DM-F19A*
*Fully Integrated I/O*

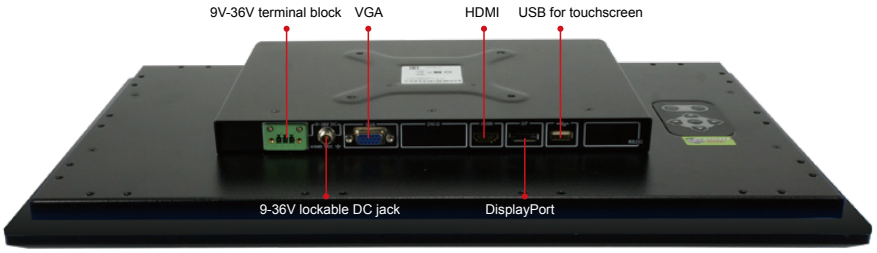


*DM-F22A/F24A*
*Fully Integrated I/O*

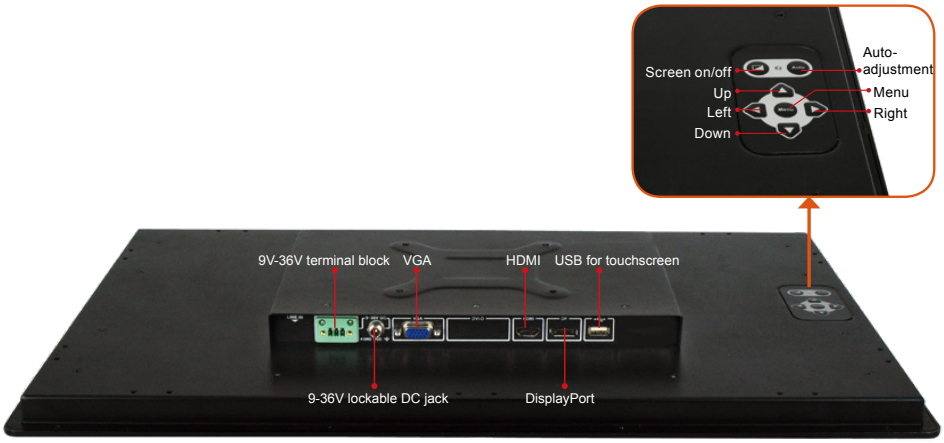

# DM-F19A

INGENIEURBÜRO FÜR INDUSTRIE-ELEKTRONIK GMBH

## IPC Monitor

### DM-F65A Dimensions
*(Unit: mm)*

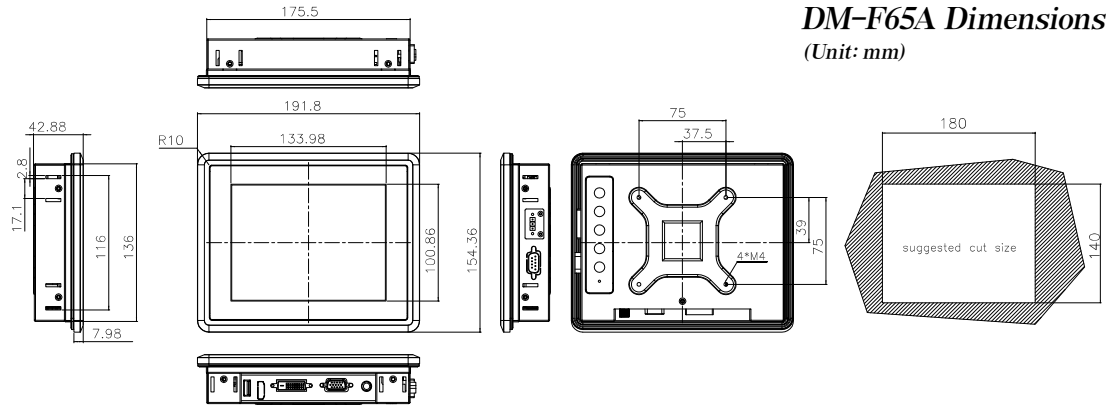


### DM-F08A Dimensions
*(Unit: mm)*

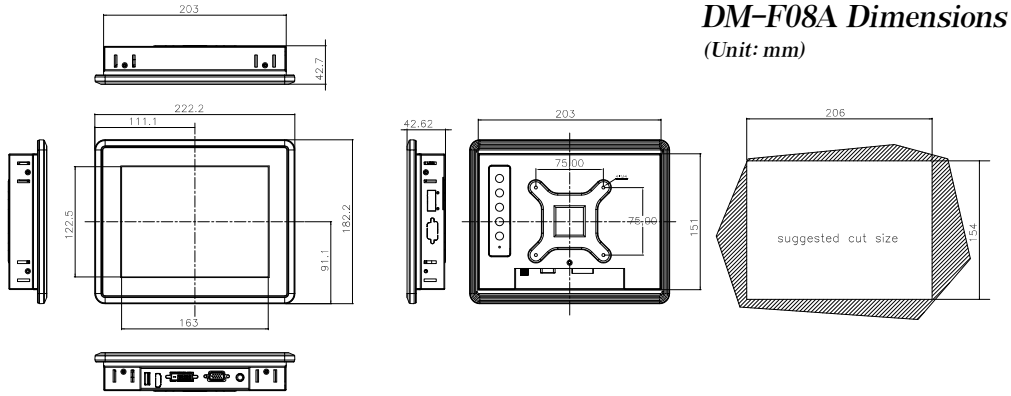


### DM-F12A Dimensions
*(Unit: mm)*

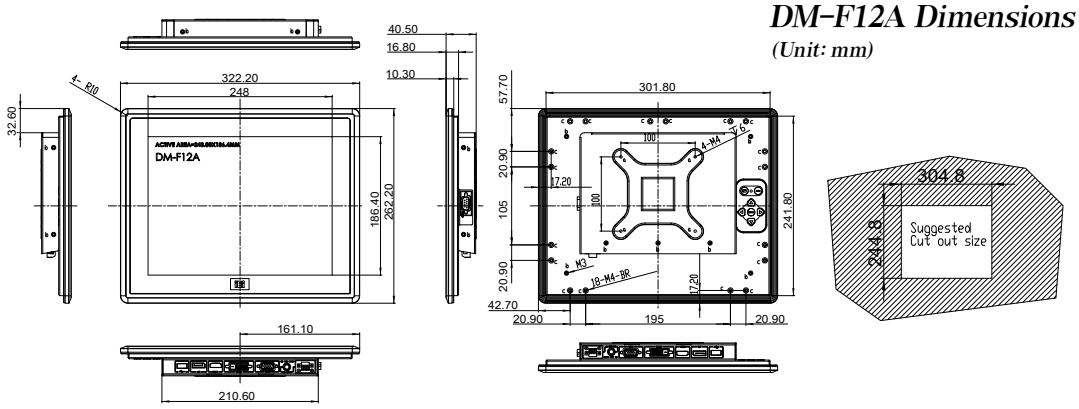


### DM-F15A Dimensions
*(Unit: mm)*

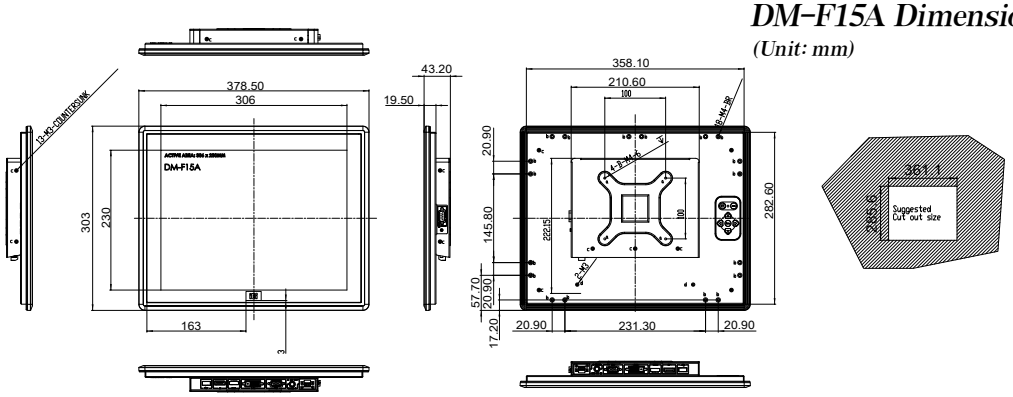


IIE Ingenieurbüro für Industrie-Elektronik GmbH | Marie-Curie-Straße 9 | 50259 Pulheim
Tel.: +492234 / 982010 | Fax: +492234 / 9820190 | E-Mail: vertrieb@iie.de

Änderungen und Irrtum vorbehalten.

# DM-F19A

INGENIEURBÜRO FÜR INDUSTRIE-ELEKTRONIK GMBH

## IPC Monitor

### *DM-FW15A Dimensions*

*(Unit: mm)*

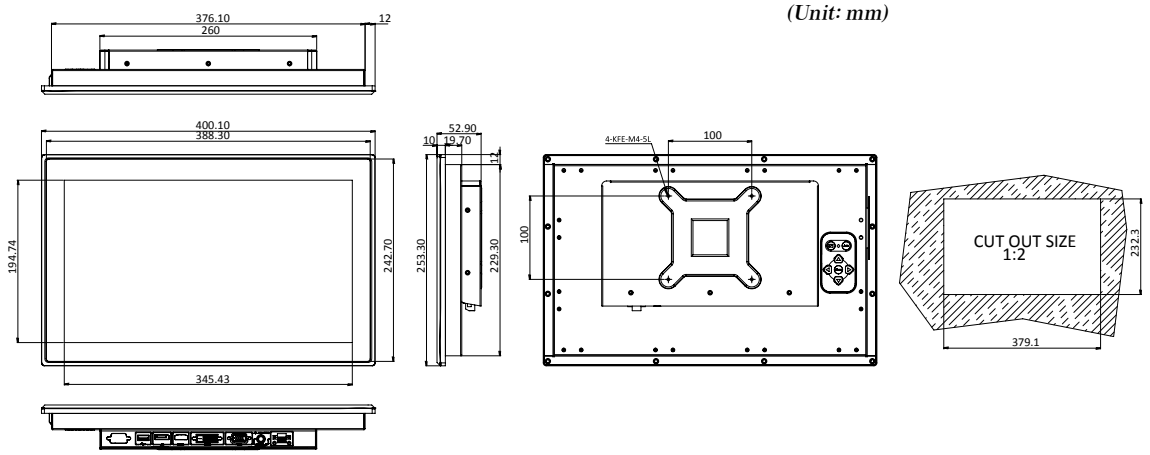


### *DM-F17A Dimensions*

*(Unit: mm)*

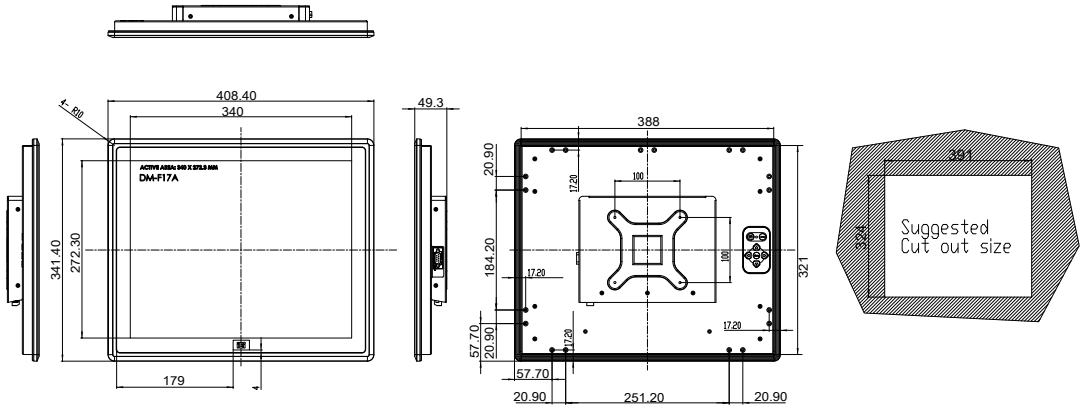


### *DM-F19A Dimensions*

*(Unit: mm)*

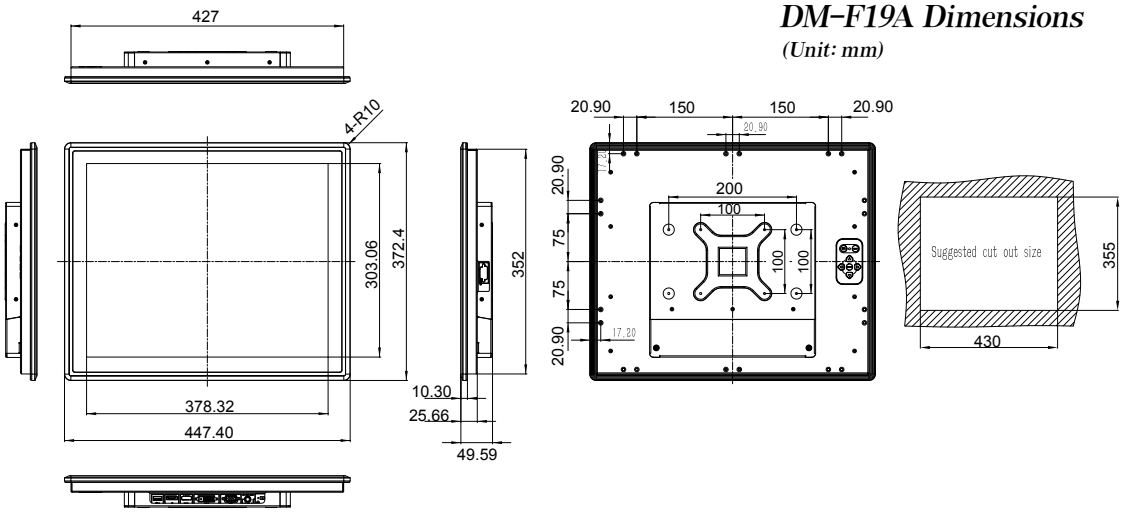


IIE Ingenieurbüro für Industrie-Elektronik GmbH | Marie-Curie-Straße 9 | 50259 Pulheim
Tel.: +492234 / 982010 | Fax: +492234 / 9820190 | E-Mail: vertrieb@iie.de

Änderungen und Irrtum vorbehalten.

# DM-F19A

INGENIEURBÜRO FÜR INDUSTRIE-ELEKTRONIK GMBH

## IPC Monitor

### *DM-FW19A Dimensions*

*(Unit: mm)*

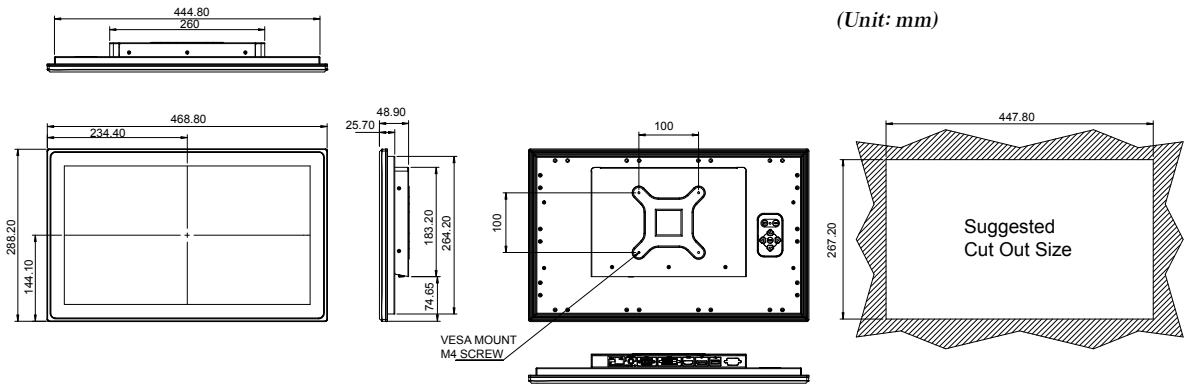


### *DM-F22A Dimensions*

*(Unit: mm)*

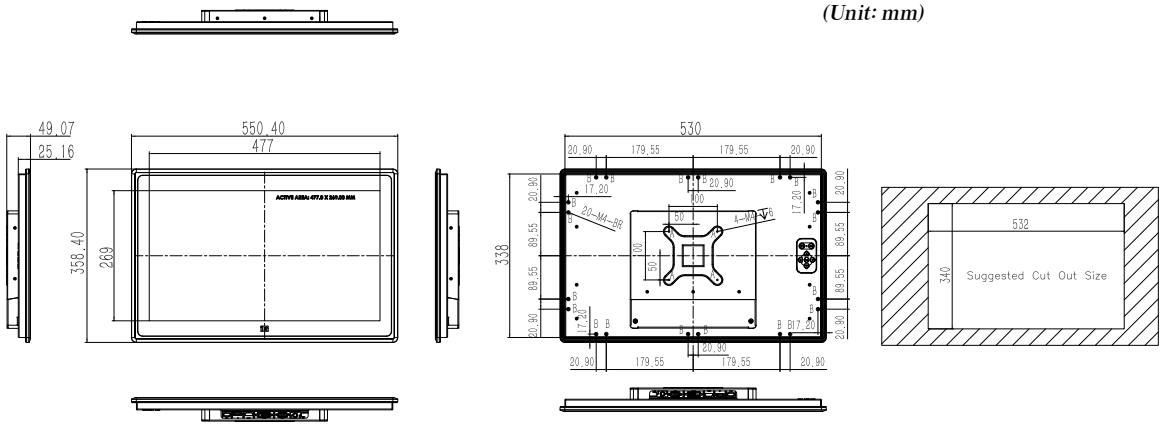


### *DM-F24A Dimensions*

*(Unit: mm)*

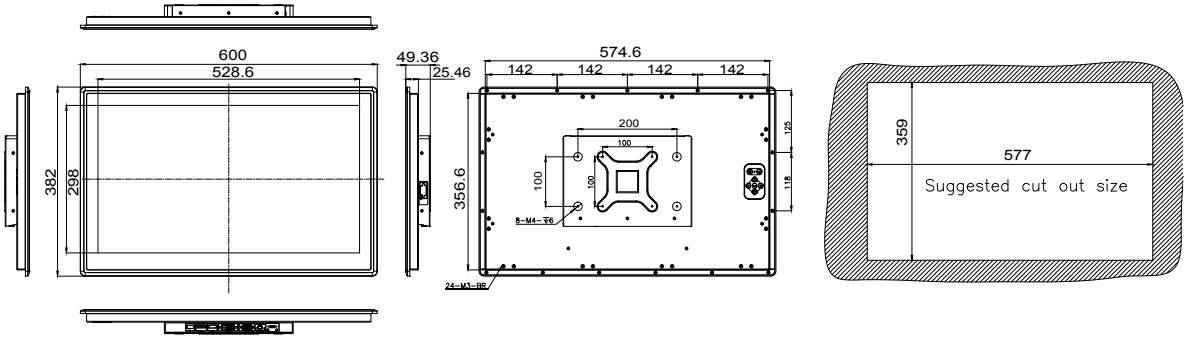


IIE Ingenieurbüro für Industrie-Elektronik GmbH | Marie-Curie-Straße 9 | 50259 Pulheim
Tel.: +492234 / 982010 | Fax: +492234 / 9820190 | E-Mail: vertrieb@iie.de

Änderungen und Irrtum vorbehalten.